REV.	ECN NO.	DATE	SIGN	DESCRIPTION

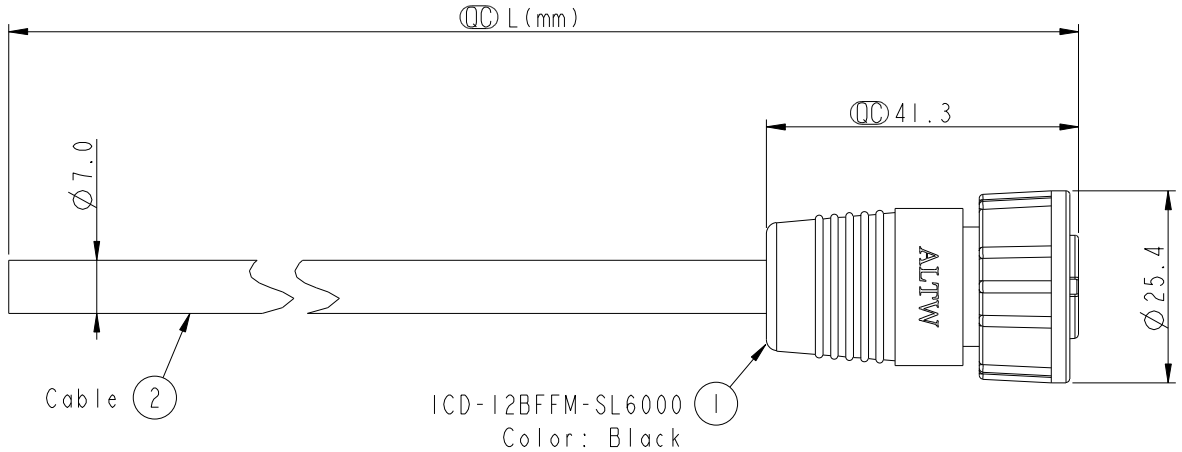

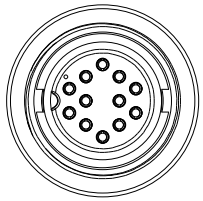

Conn.

ALTW DCC. DEPT. CONFIDENTIAL 2014.01.13 ISSUED

ALTW CONFIDENTIAL 2014-01-11 R&D DEPT.

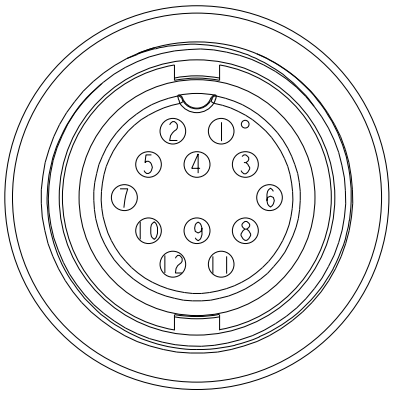

Pin Assignments
Front View

Conn.	Wire Color
12	Light Green 淺綠
11	Purple 紫
10	Orange 橙
9	Black 黑
8	Red 紅
7	Pink 粉紅
6	Gary 灰
5	Yellow 黃
4	Green 綠
3	White 白
2	Blue 藍
1	Brown 棕

Pin Out

ICD-12BFFM-SL6AXX

XX :01~99Meters
01 :01Meter
02 :02Meters
:
:
99 :99Meters

Cable Length(L):01~99Meters

Note:
* QC Important Dimension To Check.
* Waterproof Rate: IP66
* Housing: Nylon+GF, Black.
* Female Pin: Copper Alloy, Gold Plated.
* Screw Nut: Nylon+GF, Black.
* O-Ring: Silicon, Gray
* Cable: UL2464 24AWG*12C+Drain+Al/My PVC Jacket UV Resistant, OD=7.0, Black.
* Cable Length Tolerance: 01M:40mm
  02M~05M:±60mm
  06M~10M:±100mm
  11M~30M:±200mm
  31M~99M:±500mm

UNIT:mm

TOLERANCE ±0.5

TITLE: MIDDLE CNC PIN CABLE SCREW 12P F CONN F PIN			
SCALE 1:1	SIZE A4	SHEET 1 OF 1	
REV. A	WC-REV. A.2	QC: Inspection item	

Amphenol LTW
安費諾亮泰企業股份有限公司

ITEM NO		DRAWN BY Jiazhen_li	DATE 2014-01-11
DWG NO ICD-12BFFM-SL6AXX		CHECKED BY Ruru	DATE 2014-01-11
CUSTOMER ALTW		APPROVED BY Jerry	DATE 2014-01-11

FMW10702-01-02A1

THIS DOCUMENT IS SUBJECT TO CHANGE WITHOUT NOTICE. IT IS CONFIDENTIAL AND A PROPERTY OF Amphenol LTW. DISCLOSURE TO THIRD PARTY HAS TO BE AUTHORIZED BY Amphenol LTW.